Description

The T3E-6CT is general purpose input / ouput modules for building integrators. Available in several input/output configurations, the T3 module provide convenient termination for field devices and interfacing to your HVAC, lighting, temperature sensors, and other typical building automation applications. Each of the analog inputs can be jumper configured for signals of either 0-5V, 0-20mA, or dry contact. The outputs are available in dry contacts 1amp/output, 0-10V analog, and PNP sinking. The modules are slave devices that can be easily controlled via the RS485 serial interface using the industry standard Modbus Protocol.

Highlights:

- Surge-Protected Analog Inputs with 10-bit Resolution
- Outputs can Individually be switched to ON, OFF, AUTO
- High Impact Plastic Enclosure provides durability in commercial environments
- Standard Modbus Protocol allows for up to 254 unique devices on one RS485 Network

Specifications

Inputs	General purpose 13 Analog Inputs
Outputs	2 Relay Outputs
Operating Temperature	-30~70°C (-22~158°F)
Supply Voltage	12~24VAC/DC ±10%, 50-60Hz
Power Consumption	100mA at 12VDC
Ethernet Port	Bacnet and Modbus protocol, supports both MSTP and IP connections
Relay Contacts Rating	Max 2A
Ambient Humidity	10-90 %Rh
Plastic Housing	Flammability Rating UL 94HB
Enclosure	ABS with rubberized texture
Temperature Sensor	10K Thermistor ±0.5°C
Color	Black

Dimension

Unit:mm

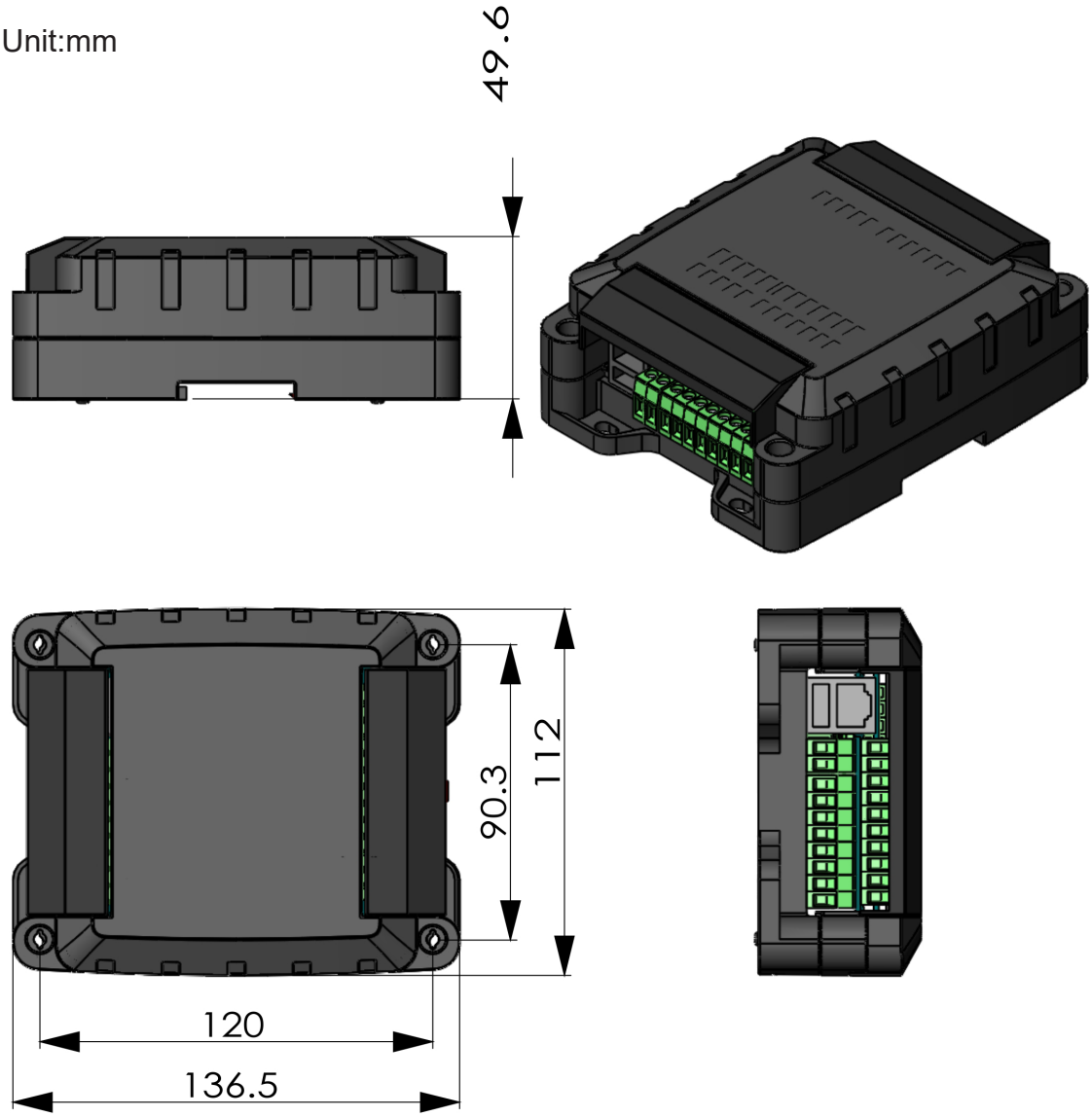

Wiring Diagram

Accessing T3E-6CT Registers Via Serial Communications

T3E-6CT has a built-in serial interface for communication over an RS485 Network. Communication is currently implemented using Modbus Protocol. However, future version of the T3E-6CT will work with both BACnet and TCP/IP Protocols. For detailed information on Modbus Protocol, see the chapter entitled Modbus Serial Communications.

Connecting the T3E-6CT to a computer

T3E-6CT can be connected to a computer serial port via the RS485 interface.Below picture shows how the T3-6CT should be connected to the serial port of a PC.

T3E-6CT Wiring Diagram

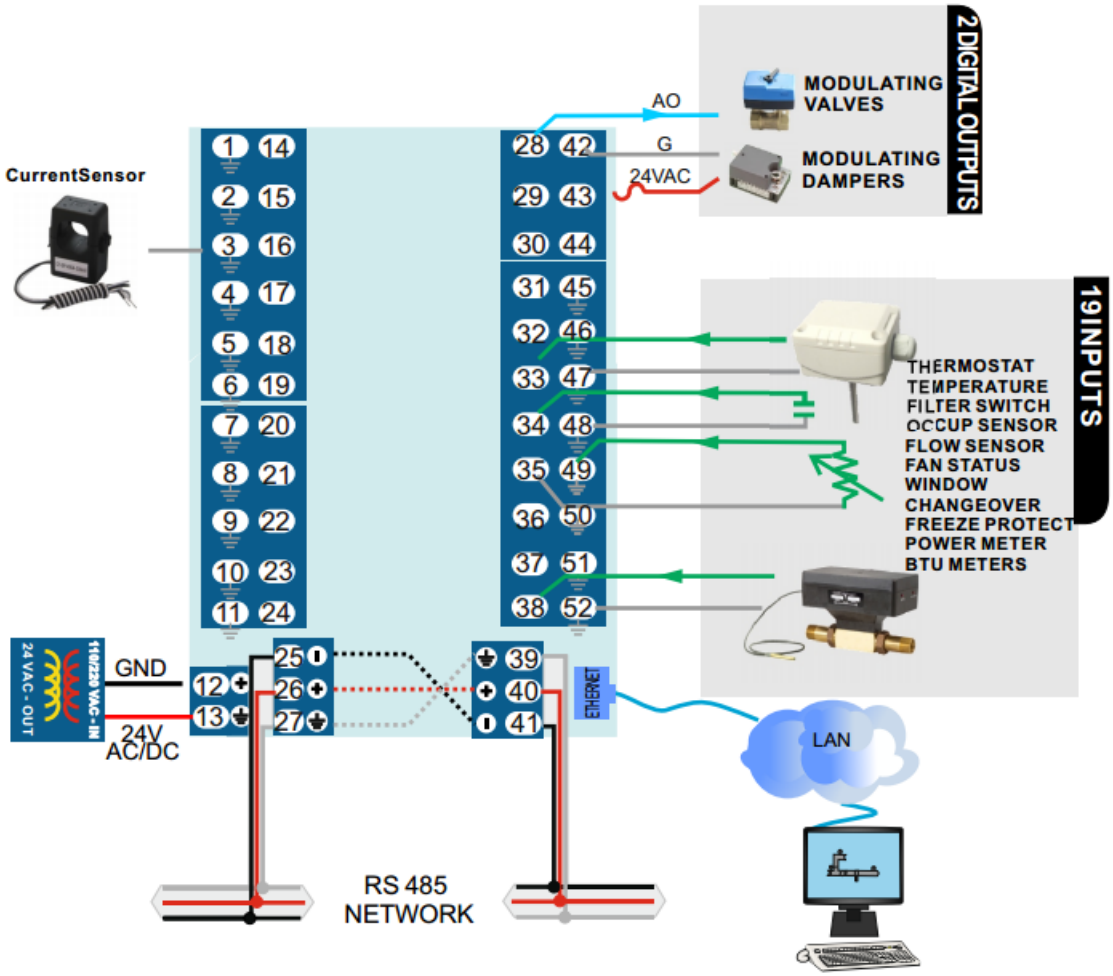

USB RS485

T3E-CT connect with current sensor

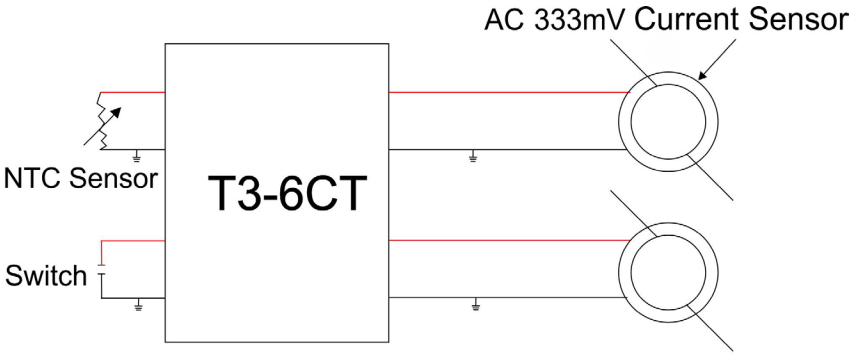

Typical Sensor Inputs

Title	Typical Wiring Diagram	Jumper
Thermistors	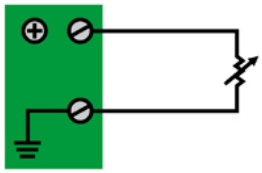	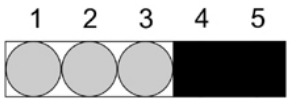
Dry Contacts	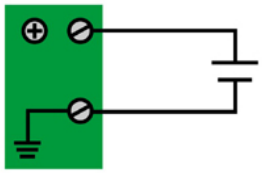	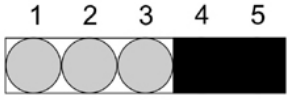
Transducer Signal 0-10V 0-5V	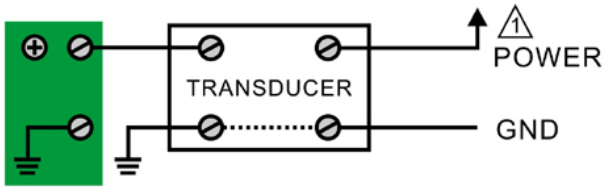 1 T3 module and transducer power share GND. Transducer shall be half wave rectified.	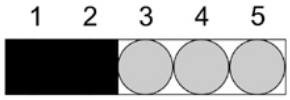
Transducer 4-20mA	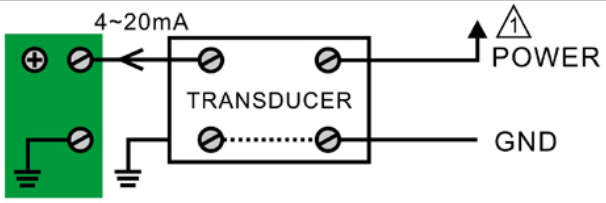 1 T3 module and transducer power share GND. Transducer shall be half wave rectified.	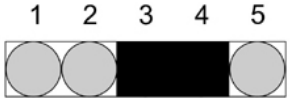

T3000 Operation

1.Visit https://temcocontrols.com/ftp/software/T3000.zip, download T3000 software and install it;
2.Plug T3E-6CT in power,connect it to a PC via RS485 or Ethernet;
3.Start the T3000 software,click to scan,the following view will appear. Close after the scan is completed.

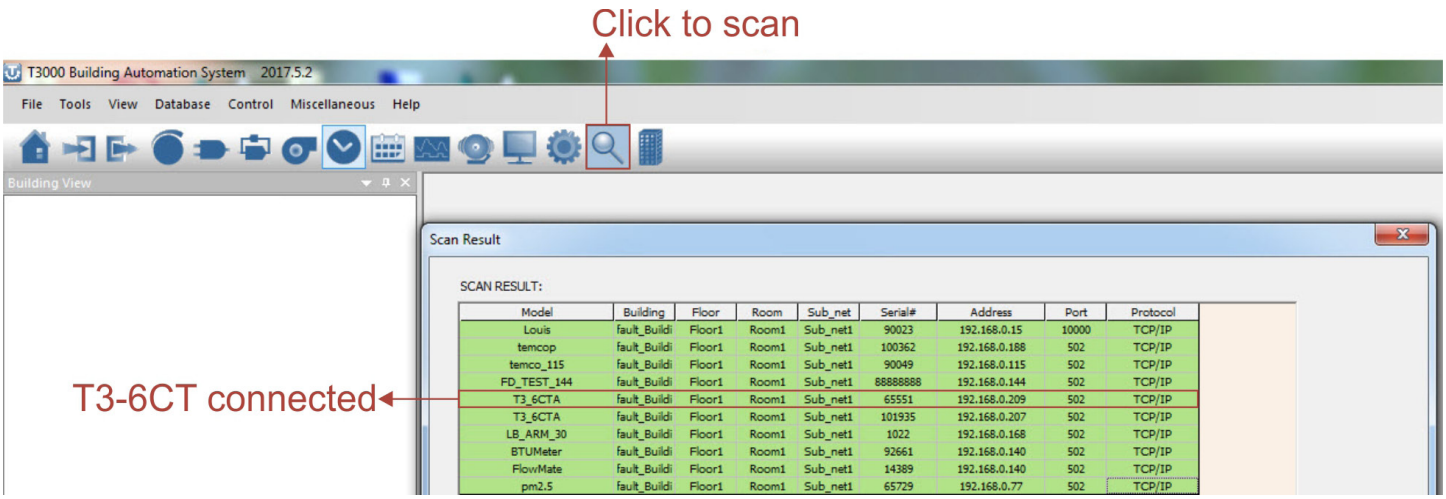

Model	Building	Floor	Room	Sub_net	Serial#	Address	Port	Protocol
Louis	fault_Buildi	Floor1	Room1	Sub_net1	90023	192.168.0.15	10000	TCP/IP
temcop	fault_Buildi	Floor1	Room1	Sub_net1	100362	192.168.0.188	502	TCP/IP
temco_115	fault_Buildi	Floor1	Room1	Sub_net1	90049	192.168.0.115	502	TCP/IP
FD_TEST_144	fault_Buildi	Floor1	Room1	Sub_net1	88888888	192.168.0.144	502	TCP/IP
T3_6CTA	fault_Buildi	Floor1	Room1	Sub_net1	65551	192.168.0.209	502	TCP/IP
T3_6CTA	fault_Buildi	Floor1	Room1	Sub_net1	101935	192.168.0.207	502	TCP/IP
LB_ARM_30	fault_Buildi	Floor1	Room1	Sub_net1	1022	192.168.0.168	502	TCP/IP
BTUMeter	fault_Buildi	Floor1	Room1	Sub_net1	92661	192.168.0.140	502	TCP/IP
FlowMate	fault_Buildi	Floor1	Room1	Sub_net1	14389	192.168.0.140	502	TCP/IP
pm2.5	fault_Buildi	Floor1	Room1	Sub_net1	65729	192.168.0.77	502	TCP/IP

4.Click to get the INPUT information as below.

INPUT

Input	Panel	Full Label	Auto/Manual	Value	Units	Range	Calibration	Sign	Filter	Status	Jumper	Label
IN1	3	AI0	Auto	3.00		Unused		+	1	Normal	Thermistor Dry...	AI0
IN2	3	AI1	Auto	2.99		Unused			1	Normal	Thermistor Dry...	AI1
IN3	3	AI2	Auto	2.99		Unused			1	Normal	Thermistor Dry...	AI2
IN4	3	AI3	Auto	2.99		Unused			1	Normal	Thermistor Dry...	AI3
IN5	3	AI4	Auto	2.99		Unused			1	Normal	Thermistor Dry...	AI4
IN6	3	AI5	Auto	2.99		Unused			1	Normal	Thermistor Dry...	AI5
IN7	3	AI6	Auto	2.98		Unused			1	Normal	Thermistor Dry...	AI6
IN8	3	AI7	Auto	2.98		Unused			1	Normal	Thermistor Dry...	AI7
IN9	3	AIR FLOW	Auto	0.00		Unused			1	Normal	Thermistor Dry...	Air Flow
IN10	3	ACCELEROMETER	Auto	0.00		Unused		-	1	Normal	Thermistor Dry...	Accelorom
IN11	3	CT1	Auto	0.10		Unused		+	1	Normal	Thermistor Dry...	CT1
IN12	3	CT2	Auto	0.10		Unused		+	1	Normal	Thermistor Dry...	CT2
IN13	3	CT3	Auto	0.10		Unused		+	1	Normal	Thermistor Dry...	CT3
IN14	3	CT4	Auto	0.09		Unused		+	1	Normal	Thermistor Dry...	CT4
IN15	3	CT5	Auto	0.09		Unused		+	1	Normal	Thermistor Dry...	CT5
IN16	3	CT6	Auto	0.10		Unused			1	Normal	Thermistor Dry...	CT6
IN17	3		Auto	0.00		Unused			0	Normal	Thermistor Dry...	
IN18	3		Auto	0.00		Unused			0	Normal	Thermistor Dry...	
IN19	3		Auto	0.00		Unused			0	Normal	Thermistor Dry...	

5.Click to to edit advanced settings.RFM69 ID can be set in the tab.

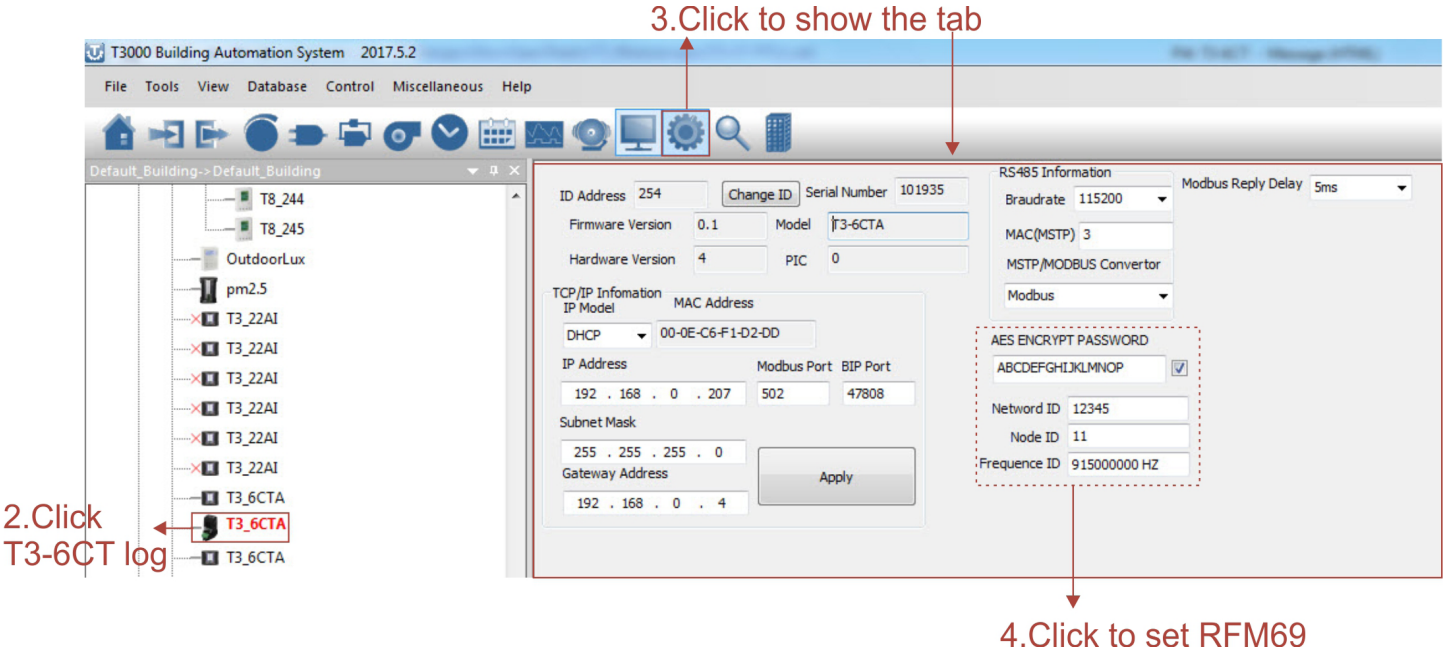

Register list

Address	Bytes	Register and Description
0 to 3	4	Serial Number, 4 byte value
4	1	EEPROM Hardware Version Number
5	1	Firmware Version Number
6	1	ADDRESS. Modbus Device Address
7	1	Product Model
8	1	Hardware Revision
9	1	PIC Version Number
10-12		Reserved
13	1	Calibration Register-Used to calibrate the outputs
14		Reserved
15	1	Baudrate Setting: 0 = 9600bps, 1 = 19200bps
19	1	MODBUS RESPONSE DELAY DEFAULT 0 = 2.5MS 1 = 7.5MS
22~99		Reserved
100	2	Output 1 Register
101	2	Output 2 Register
102	2	Output 1 Switch Bank
103	2	Output 2 Switch Bank
104	2	Analog Input 1 High Byte
105	2	Analog Input 1 Low Byte
106	2	Analog Input 2 High Byte
107	2	Analog Input 2 Low Byte
108	2	Analog Input 3 High Byte
109	2	Analog Input 3 Low Byte
110	2	Analog Input 4 High Byte
111	2	Analog Input 4 Low Byte
112	2	Analog Input 5 High Byte
113	2	Analog Input 5 Low Byte
114	2	Analog Input 6 High Byte
115	2	Analog Input 6 Low Byte
116	2	Analog Input 7 High Byte
117	2	Analog Input 7 Low Byte
118	2	Analog Input 8 High Byte
119	2	Analog Input 8 Low Byte
120	2	Analog Input 8 Low Byte
121	2	Analog Input 9 Low Byte
122	2	Analog Input 10 High Byte
123	2	Analog Input 10 Low Byte
124	1	Analog Input 11 High Byte

Address	Bytes	Register and Description
125	2	Analog Input 11 Low Byte
126	2	Analog Input 12 High Byte
127	2	Analog Input 12 Low Byte
128	2	Analog Input 13 High Byte
129	2	Analog Input 13 Low Byte
501	1	RFM69 RegOpMode
502	1	RFM69 RegDataModul
503	1	RFM69 RegBitrateMsb
504	1	RFM69 RegBitrateLsb
505	1	RFM69 RegFdevMsb
506	1	RFM69 RegFdevLsb
507	1	RFM69 RegFrfMsb
508	1	RFM69 RegFrfMid
509	1	RFM69 RegFrfLSB
510	1	RFM69 RegOsc1
511	1	RFM69 RegAfcCtrl
512	1	RFM69 Reserved0C
513	1	RFM69 RegListen1
514	1	RFM69 RegListen2
515	1	RFM69 RegListen3
516	1	RFM69 RegVersion
517	1	RFM69 RegPaLevel
518	1	RFM69 RegPaRamp
519	1	RFM69 RegOcp
524	1	RFM69 RegLna
525	1	RFM69 RegRxBw
526	1	RFM69 RegAfcBw
527	1	RFM69 RegOokPeak
528	1	RFM69 RegOokAvg
529	1	RFM69 RegOokFix
530	1	RFM69 RegAfcFei
531	1	RFM69 RegAfcMsb
532	1	RFM69 RegAfcLsb
533	1	RFM69 RegFeiMsb
534	1	RFM69 RegFeiLsb
535	1	RFM69 RegRssiConfig
536	1	RFM69 RegRssiValue
537	1	RFM69 RegDioMapping1
538	1	RFM69 RegDioMapping2
539	1	RFM69 RegIrqFlags1
540	1	RFM69 RegIrqFlags2

Address	Bytes	Register and Description
541	1	RFM69 RegRssiThresh
542	1	RFM69 RegRxTimeout1
543	1	RFM69 RegRxTimeout2
544	1	RFM69 RegPreambleMsb
545	1	RFM69 RegPreambleLsb
546	1	RFM69 RegSyncConfig
547	1	RFM69 RegSyncValue1
548	1	RFM69 RegSyncValue2
549	1	RFM69 RegSyncValue3
550	1	RFM69 RegSyncValue4
551	1	RFM69 RegSyncValue5
552	1	RFM69 RegSyncValue6
553	1	RFM69 RegSyncValue7
554	1	RFM69 RegSyncValue8
555	1	RFM69 RegPacketConfig1
556	1	RFM69 RegPayloadLength
557	1	RFM69 RegNodeAdrs
558	1	RFM69 RegBroadcastAdrs
559	1	RFM69 RegAutoModes
560	1	RFM69 RegFifoThresh
561	1	RFM69 RegPacketConfig2
562-577	1	RFM69 RegAesKey1 - RFM69 RegAesKey16
578	1	RFM69 RegTemp1
579	1	RFM69 RegTemp2
599	1	RFM69 Module Exist
600	2	RFM69 Module Encrypt Key 1
601	2	RFM69 Module Encrypt Key 2
602	2	RFM69 Module Encrypt Key 3
603	2	RFM69 Module Encrypt Key 4
604	2	RFM69 Module Encrypt Key 5
605	2	RFM69 Module Encrypt Key 6
606	2	RFM69 Module Encrypt Key 7
607	2	RFM69 Module Encrypt Key 8
608	2	RFM69 Module Network ID
609	2	RFM69 Module Node ID
610	2	RFM69 Module Mode
611	2	RFM69 Module Frequnce High Byte
612	2	RFM69 Module Frequnce Low Byte
613	1	RFM69 Module Encryption Enable
614	2	RFM69 Module Deadmaster Value (5 means 0.5ms)

Address	Bytes	Register and Description
671	2	CT Input 1 Current
672	2	CT Input 2 Current
673	2	CT Input 3 Current
674	2	CT Input 4 Current
675	2	CT Input 5 Current
676	2	CT Input 6 Current
679	2	Accelero X-axis value
680	2	Accelero Y-axis value
681	2	Accelero Z-axis value
682	2	Accelero Sensitivity Low Line
683	2	Accelero Sensitivity High Line (1023 is biggest)
1002	2	Air Flow Pressure filter(1-10)
1003	2	ad value
1004	2	prssure(0.01inWC)
1005	1	Air Flow Pressure Table Select(0 = factory table, 1 = user table)
1008	2	Air Flow Pressure Calculate Point number
1009~1028		the factory calibrate point
1029	2	Air Flow Pressure User Calculate Point number
1030~1049	2	the user calibrate table point
1052	1	flow Rate (0.1 m/s or 0.1 fps)
1053	1	Air Flow value,float type High Byte(m^3/s or cfm)
1054	1	Air Flow Value ,float type Low Byte(m^3/s or cfm)
1055	1	Air Flow Unit(0 = metric, 1 =Imperial units)
1056	1	Duct Area(0.001m^2or 0.001ft^2)
10000-10022		output 1 block
10023-10045		output 2 block
11472-11494		input 1 block
11495-11517		input 2 block